LC-X70

LC-X60

EXPAND SERIAL FUNCTIONAL SPECIFICATION

History of Modification

Rev.	Date	Page	Contents
	2004. 11.8		New released
A	2004.12.27	6	LC-X60 added

1. Overview

1.1. This Functional Specification defines the Network Card and the communication functions for LC-X70.

1.2. A Projector firmware Ver. 1.x -ready

1.3. Commands are to communicate to Network card, but most commands control a remote Projector with PC installed RS232C. That's why commands are defined as expand serial commands.

2. Serial Interface Specification

2.1. Communication Specification

Item	Specification
Synchro system	Asynchronou
Transmission Speed	9600 / 19200
Date Length	8 bit
Parity	None
Stop Bit	1
Flow Control	None

(1) Transfer rate: initial setting value is 19200.

(2) Transfer rate can be changed by service mode

2.2. Connection

Use dedicated serial cable for a connection to a computer and a Projector.

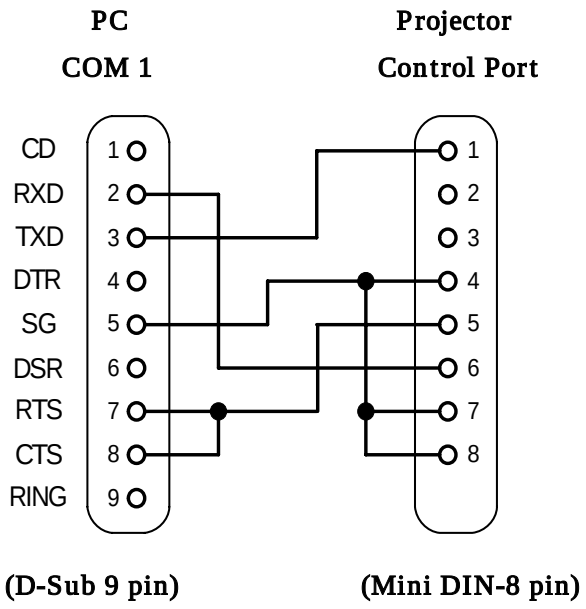

3. Note for Communications

3.1. The expand command is defined one command / one line that starts “C” and ends carriage return (0x0D).

3.2. When a projector receives carriage return (0x0D), it starts decoding.

3.3. There are two type of Expand Serial Command, Functional Execution Commands and Status Read Command.

*Functional Execution Command

“CF_BRIGHT_032” [CR]

Note) _ means a space

*Status Read Command

“CR_RIGHT” [CR]

3.4. When it takes more than one second to receive one Command, it clears information of buffer. (Until the projector receives the carriage return since the projector has received the first data)

3.5. A projector sends a return command in a few ms to 8000ms after the projector has received the command. When the computer keeps sending some commands, it must wait sending next command until the projector has received the response. In short, make sure that the projector sends a return command, and then the computer can send next command.

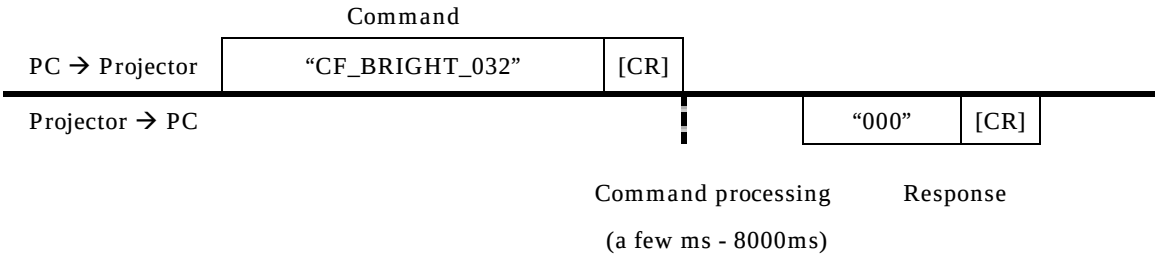

When a computer issues next command before receiving a return command, the projector may not operate properly. Command processing may not be accepted before the current command processing has not done.

3.5.1. The projector usuall issues a return commands in 1000 ms after receiving a return command. It takes more than 1000ms for some functional execution commands (CF) to send a return command as shown in the table below.

Command	Contents
CF_IMAGE	Select Image mode
CF_INPUT	Select Input
CF_SCREEN	Slect Screen size
CF_SYSTEM	Select System
CF_INPUT%1	Select Input %1 and signal at the same time
CF_IMAGEADJ	Reset Image adjustment / Store Image adjustment

3.5.2. It takes about 8 seconds for internal initialization after plugging in AC power. During this time, it cannot process Command. Do not issue any commands.

4. Name Definition

4.1. Data from a controller to a projector is represented as Command, and data from a projector to a controller for the incoming command is represented as Responce.

4.2. [CR]: Carriage Return Code

The Command ends carriage return code.

Also Response command ends carriage return, too.

4.3. _: Space Code

All space code is indicated by (_).

4.4. %1: Parameter in Command

When there are some parameters, the parameters are defined as %2, %3, …

4.5. %%%: Error Code from a projector

“000”: Normal Reception

See 7. Error Code Table for error number

5. Functional Execution Command Table

5.1 Image Series Command Table

Execute command	Item
CF_BRIGHT_%1 [CR]	Set Brightness value
CF_CONT_%1 [CR]	Set Contrast value
CF_COLOR_%1 [CR]	Set Color value
CF_TINT_%1 [CR]	Set Tint value
CF_SHARP_%1 [CR]	Set Sharpness value
CF_GAMMA_%1 [CR]	Set Gamma value
CF_WBAL-R_%1 [CR]	Set White Balance Red vakue
CF_WBAL-G_%1 [CR]	Set White Balance Green value
CF_WBAL-B_%1 [CR]	Set White Balance Blue value
CF_COLTEMP_%1 [CR]	Set Color Temp. value
CF_NZRED_%1 [CR]	Set or cancel for Noise Reduction
CF_PROGV_%1 [CR]	Set or cancel for Progressive
CF_IMAGE_%1 [CR]	Set Image mode
CF_IMAGEADJ_%1 [CR]	Reset or store for Image adjustment
CF_APCTRL_%1 [CR]	Set Auto Picture Control
CF_COLMNSAV_%1 [CR]	Store current color management setting status
CF_COLMNLD_%1 [CR]	Call color management setting status

5.2. PC Control Command Table

Execute command	Item
CF_FSYNC_%1 [CR]	Set Fine Sync. value
CF_TDOTS_%1 [CR]	Set Total Dots value
CF_CLAMP_%1 [CR]	Set Clamp value
CF_H-POS_%1 [CR]	Set Horizontal Position value
CF_V-POS_%1 [CR]	Set Vertical Position value
CF_DDOTS_%1 [CR]	Set Display Dots value
CF_DLINE_%1 [CR]	Set Display Line value
CF SETPCADJ [CR]	Reflect the setting value on the image
CF_ORGMODE_%1 [CR]	Specify serial for PC mode
CF_PCSTORE_%1 [CR]	Store current PC Adj. status to Mode 1, 2, 3, 4, or 5.

5.3. Input Control Command Table

Execute command	Item
CF_INPUT_%1 [CR]	Select Input
CF_SOURCE_%1 [CR]	Select Input source
CF_INPUT1_%1 [CR]	Select Input-1 and also set source to %1 at once
CF_INPUT2_%1 [CR]	Select Input-2 and also set source to %1 at once
CF_INPUT3_%1 [CR]	Select Input-3 and also set source to %1 at once
CF_INPUT4_%1 [CR]	Select Input-4 and also set network
CF_SYSTEM_%1 [CR]	Select System

5.4. Screen Series Command Table

Execute command	Item
CF_SCREEN_%1 [CR]	Select Screen size
CF_FLSCREN_%1 [CR]	Set or cancel Full Screen image
CF_TRUE_%1 [CR]	Set or cancel True image
CF_DZCENT_%1 [CR]	Cancel Digital Zoom mode
CF_KEYSTONE_%1 [CR]	Set Keystone
CF_KYSTNMODE_%1 [CR]	Set Keystone Store mode
CF_ANAMORPHIC_%1 [CR]	Set Anamorphic On / Off
CF_VSCALE_%1 [CR]	Set V-Scale
CF_VPOS_%1 [CR]	Set V-Position
CF_HSCALE_%1 [CR]	Set H-Scale
CF_HPOS_%1 [CR]	Set H-Position

5.5. Lamp Series Command Table

Execute command	Item
CF_LAMPH_%1 [CR]	Reset Lamp total running time
CF_LAMPMODE_%1 [CR]	Select Lamp mode

5.6. Sound Series Command Table

Execute command	Item
CF_VOLUME_%1 [CR]	Set Volume value
CF_MUTE_%1 [CR]	Set Sound mute On / Off
CF_BLTINSP_%1 [CR]	Set Built-in Speaker On / Off

5.7. Setting Series Command Table

Execute command	Item
CF_BBACK_%1 [CR]	Set Blue Back function
CF_DISP_%1 [CR]	Set Display function
CF_LOGO_%1 [CR]	Set Logo function
CF_CEIL_%1 [CR]	Set Ceiling function
CF_REAR_%1 [CR]	Set Rear function
CF_RCODE_%1 [CR]	Select Remote control code
CF_LANG_%1 [CR]	Select OSD language.
CF_ON-STA_%1 [CR]	Set Power ON Start function
CF_P-MANE_%1 [CR]	Set Power Management function
CF_FANSPEED_%1 [CR]	Select Fan speed
CF_KEYDIS_%1 [CR]	Set RC / KEY inhibit
CF_FDEFAULT_%1 [CR]	Set Factory Default

6. Status Read Command Table

6.1. Image Series Status Read Command Table

Status Read Command	Item
CR_BRIGHT [CR]	Read Brightness value
CR_CONT [CR]	Read Contrast value
CR_COLOR [CR]	Read Color value
CR_TINT [CR]	Read Tint value
CR_SHARP [CR]	Read Sharpness value
CR_GAMMA [CR]	Read Gamma value
CR_WBAL-R [CR]	Read White Balance Red value
CR_WBAL-G [CR]	Read White Balance Green value
CR_WBAL-B [CR]	Read White Balance Blue value
CR_COLTEMP [CR]	Read Color Temp. setting
CR_NZRED [CR]	Read Noise Reduction setting
CR_PROGV [CR]	Read Progressive setting
CR_IMAGE [CR]	Read Image setting
CR_IMGGMD [CR]	Read Image Gamma setting
CR_APCTRL [CR]	Read Auto Picture Control setting

6.2. PC Status Read Command Table

Status read command	Item
CR_FSYNC [CR]	Read Fine Sync. value
CR_TDOTS [CR]	Read Total Dots value
CR_CLAMP [CR]	Read Clamo value
CR_H-POS [CR]	Read Horizontal Position value
CR_V-POS [CR]	Read Vertical Position value
CR_DDOTS [CR]	Read Display Dots value
CR_DLINE [CR]	Read Display Line value
CR_ORGMODE [CR]	Read base signal of PC mode
CR_PCSTORE [CR]	Read if mode 1 to 5 for PC Adj. is Free or Stored
CR_SETPCADJ [CR]	Read PC signal for current PC display status

6.3. Video Status Read Command Table

Status read command	Item
CR_SERSYS [CR]	Read selected current signal. When in Auto mode, it returns a result by auto detect.

6.4. Input Status Read Command Table

Status read command	Item
CR_INPUT [CR]	Read Input No.
CR_SOURCE [CR]	Read Input source
CR_SRCINP1 [CR]	Read Input 1 source
CR_SRCINP2 [CR]	Read Input 2 source
CR_SRCINP3 [CR]	Read Input 3 source
CR_SRCINP4 [CR]	Read Input 4 source
CR_SYSTEM [CR]	Read System

6.5. Screen Status Read Command Table

Status read command	Item
CR_FLSCREN [CR]	Read Full Screen setting
CR_SCREEN [CR]	Read Screen Size setting
CR_KYSTNMODE [CR]	Read Keystone Store mode setting
CR_ANAMORPHIC [CR]	Read Anamorphic setting
CR_VSCALE [CR]	Read V-Scale setting
CR_VPOS [CR]	Read V-Position setting
CR_HSCALE [CR]	Read H-Scale setting
CR_HPOS [CR]	Read H-Position setting

6.6. Lamp Status Read Command Table

Status read command	Item
CR_LAMPREPL [CR]	Read Lamp Replacement information
CR_LAMPMODE [CR]	Read Lamp mode
CR_PROJH [CR]	Read Total Projector running time

6.7. Sound Status Read Command Table

Status read command	Item
CR_VOLUME [CR]	Read Volume value
CR_MUTE [CR]	Read Sound mute setting
CR_BLTINSP [CR]	Read Built-in Speaker setting

6.8. Setting Status Read Command Table

Status read command	Item
CR_BBACK [CR]	Read Blue Back setting
CR_DISP [CR]	Read Display setting
CR_LOGO [CR]	Read Logo setting
CR_RCODE [CR]	Read Remote Control Code setting
CR_LANG [CR]	Read OSD Language setting
CR_ON-STA [CR]	Read ON Start setting
CR_P-MANE [CR]	Read Power Management setting
CR_P-MANETIME [CR]	Read Power Management Time setting
CR_FANSPEED [CR]	Read Fan Control Speed setting
CR_KEYDIS [CR]	Read RC / KEY inhibit setting

6.9. Other Status Read Command Table

Status read command	Item
CR_SIGNAL [CR]	Read Signal or No Signal
CR_VMUTE [CR]	Read No Show setting
CR_FREEZE [CR]	Read Freeze setting
CR_PTIMER [CR]	Read P-Timer operating status
CR_INFPFAIL [CR]	———
CR_TEMPWARN [CR]	Read if sensors are exceeding critical temperature or not
CR_TEMPFAIL [CR]	Read the temperature when sensors approached critical temperature

7. Error Code Table

Error Code	Item
?	*When receives data that cannot be decoded *Parameter determination error (Digit number error, and incorrect letter included)
000	Normal Reception (Not error)
101	The function is not available in the selected mode
102	Selected the value is out of range (Selected value will not be reflected)
103	Command mismatched to the Hardware (Command for unpopulated option function)

8. Functional Execution Command

8.1. Format

(1) The following format's Commands issued from a PC.

Pattern 1: "CF_COMMAND" [CR]

Pattern 2: "CF_COMMAND_" %1 [CR]

CF_: Header

COMMAND: Letters

%1: Parameter (Letters)

_: Space (To separate Command and Parameter)

(2) When a projector decoded a received data and ready to receive the next command, it will return acknowledgment.

"000" [CR]: (0x06, 0x0D) When received Function Execute Command

"nnn" [CR]: "000" unable to execute any value except for "000" value for anyspecific reason

See the Error Code for its contents

(3) When received an undecodable data

Return **"?" [CR].**

8.2. Transfer Example

When setting projector total Command to 1344 by expand Command.

PC → PJ: "CF_TDOTS_1344" [CR]

PC ← PJ: "000" [CR] ---------- Reception OK

8.3. Operating Condition

When the Projector is in the following state, Function Execute Command will be limited.

State Read Commands are available under the following state.

Projector State	Valid Function Execute Command
Standby mode	C00: Power On
Count Down	C00: Power On (The Countdown is terminated)
Cooling Down	None
Cooling Down due to an unusual temperature	None
Unusual temperature	None
Abnormal State for Power Supply (60 seconds after this state occurs)	None