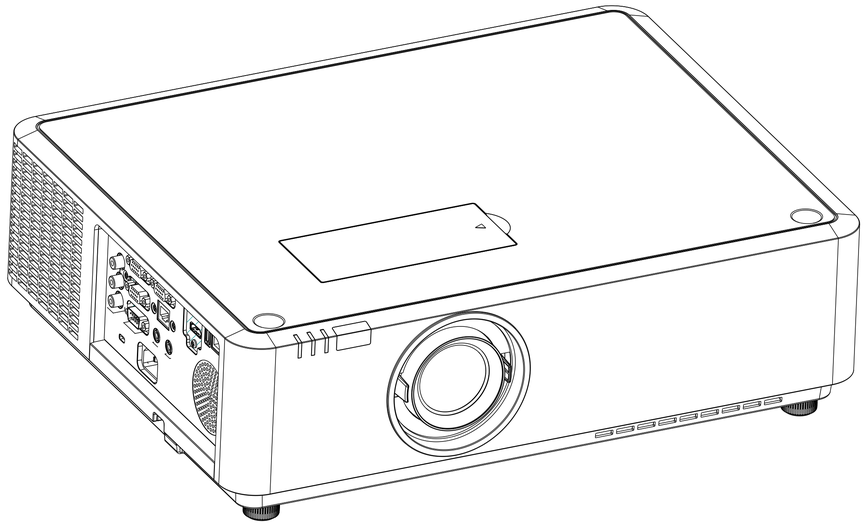

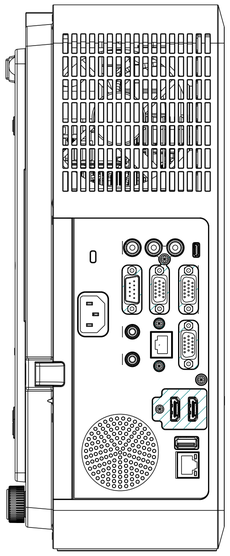

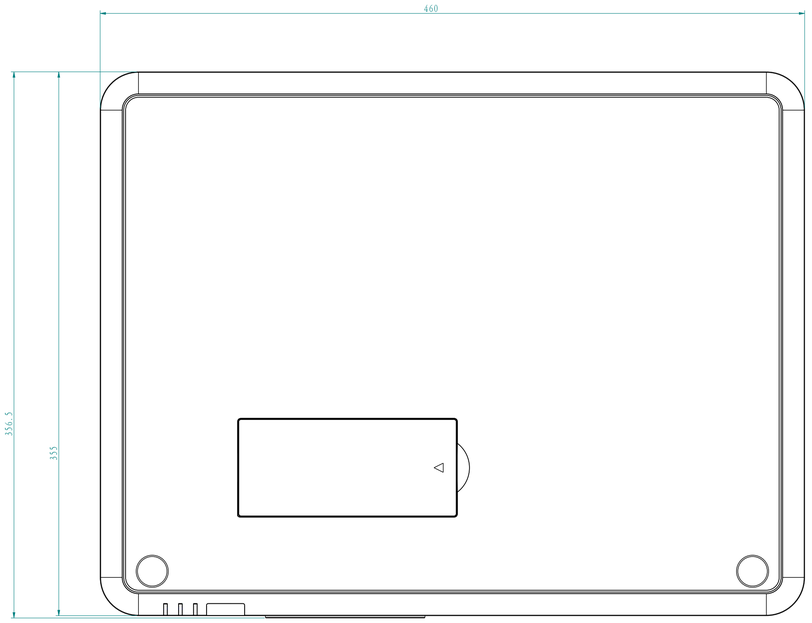
460
356.5
355

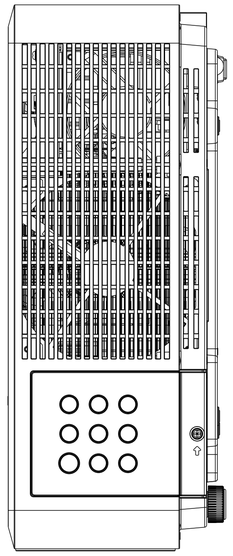

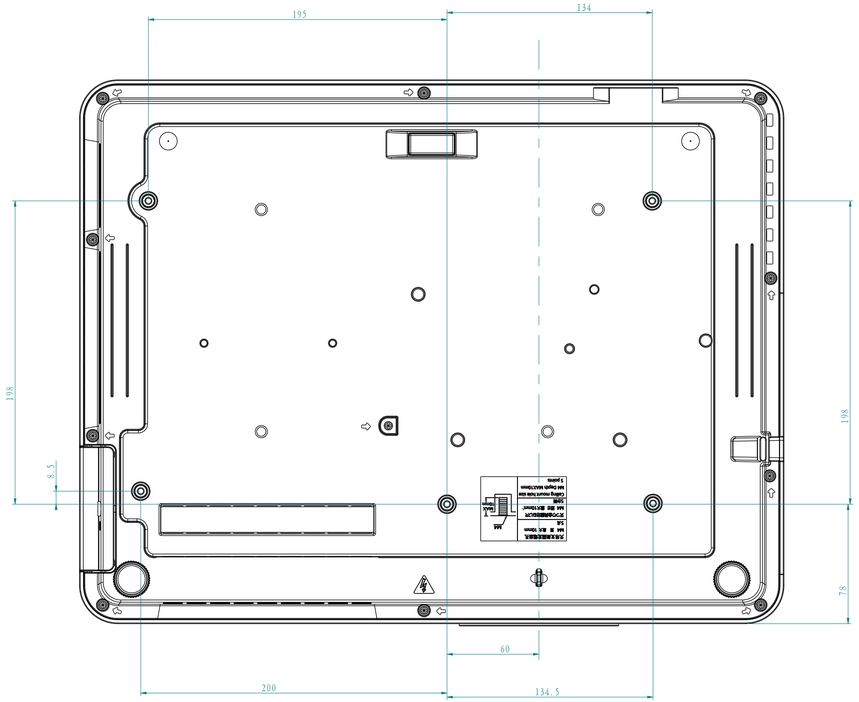
195
134
198
8.5
198
78
60
200
134.5

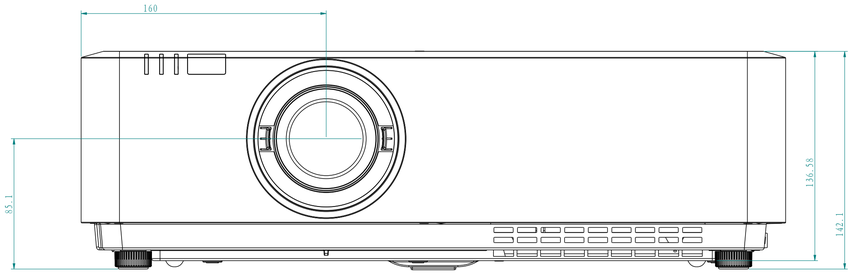
160
85.1
136.58
142.1