AH-A22020 LENS

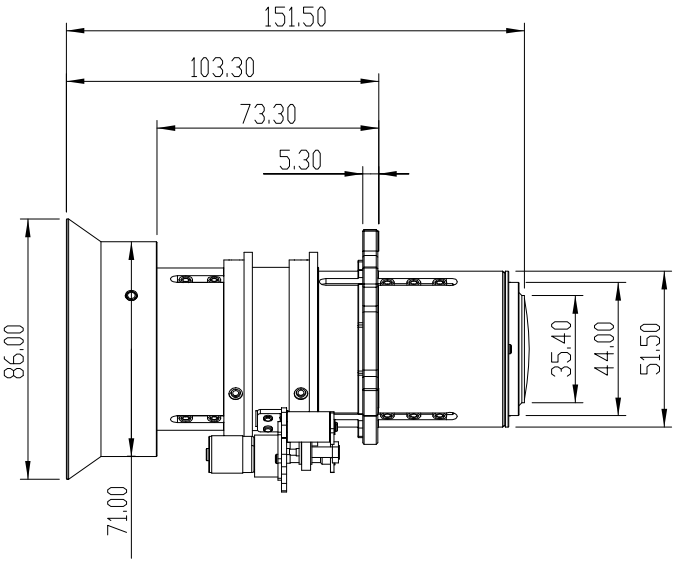

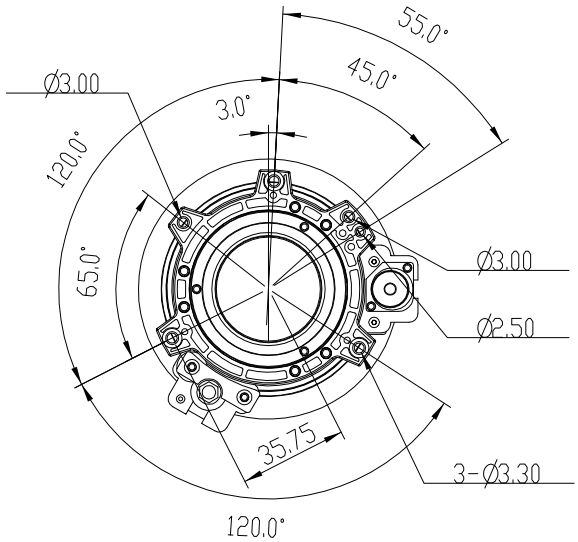

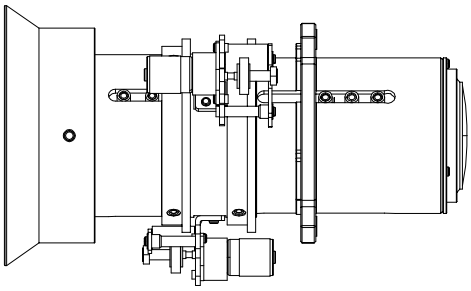
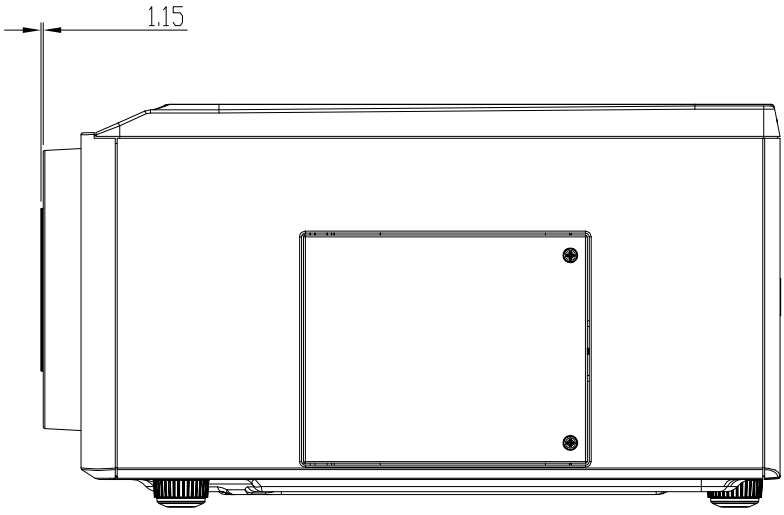
WITH LENS ATTACHED