LC-XB26 / XB21 / SB21 / XB30

EXPAND SERIAL FUNCTIONAL SPECIFICATION

History of Modification

Rev.	Contents	Date	Note
	New Document	2004.08.30	
A	LC-XB30 added	2005.03.02	

- CONTENT -

1. Overview

1.1. This Functional Specification defines communication functions such as Multi Card Director for LC-XB26 / XB21 / SB21.

1.2. The Projector Firmware Ver.1.x ready.

1.3. Commands are to communicate to such as Multi Card Imager, but most commands control a remote Projector with PC installed RS232C. That's why commands are defined as expand serial commands.

2. Serial Interface Specifications

2.1. Communication Specification

Item	Specification
Synchro System	Asynchronou
Transmission Speed	9600 / 19200
Data Length	8 bit
Parity	N/A
Stop Bit	1
Flow Control	N/A

1). Transfer rate: initial setting value is 19200.

2). Transfer rate can be changed by service mode.

2.2. Connection

Dedicated serial cable that comes with the Projector must be used for a connection to a computer and a Projector.

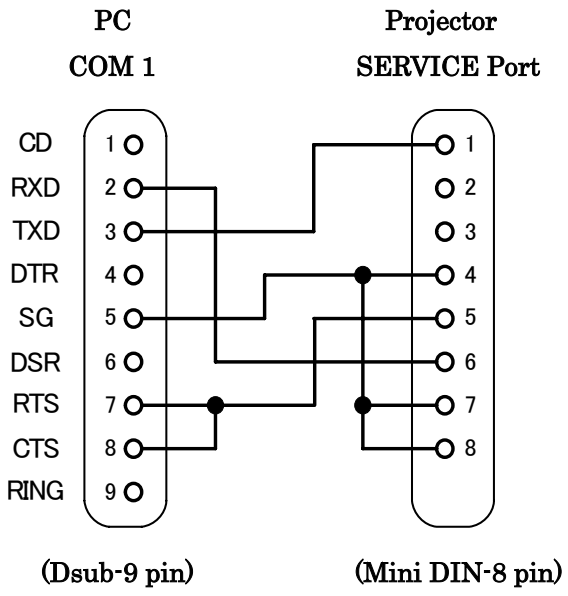

3. Notes for Communication

3.1. The expand command is defined one command / one line that starts ”C” and ends carriage return (0x0D).

3.2. There are two types of command, functional execution commands and state read commands.

Example of Functional Execution Command

“CF_BRIGHT_032” [CR]

Example of State Read Command

“CR_RIGHT” [CR]

Note) _ means a space

3.3. When it takes more than one second to receive on command, it clears information of buffer.

Since the Projector has received the first data “C”, when it takes more than 1 second until the Projector receives a carriage return (0x0D), it clears information of buffer.

3.4. When a Computer keeps sending some command, it must wait sending next command after 100ms when the Computer receives the return command.

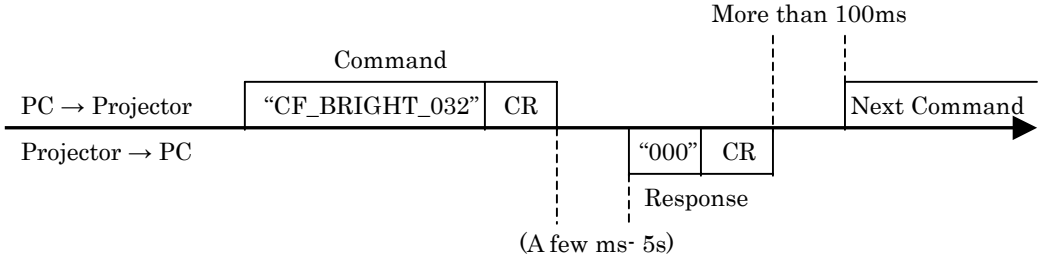

3.4.1. When a computer sends next command before receiving a return command, the Projector may not operate properly.

3.4.2. When there is no response after 5 seconds, issue next command.

3.5. It takes about 5 seconds for internal initialization after plugging in AC.

During this time, it cannot process command. Do not issue any commands.

4. Notes for Notational

4.1. Data from a controller to a Projector is represented as COMMAND, and data from a Projector to a controller for the incoming command is represented as RESPONSE.

4.2. [CR]: Carriage Return code

The Command ends carriage return code. Also response Command ends carriage return, too.

4.3. _: SpacecCode

All space code is indicated by (_).

4.4. %1: Parameter in Command

When there are some parameters, the parameters are defined as %2, %3…

4.5. %%%: Error Code from a Projector

“000”: Normal Reception

See “ 5. Error Code Table “ for error number.

4.6. %a: Parameter for response from a Projector.

When there are a few parameters, the parameter defines as %b, %c…

5. Functional Execution Command Table

5.1. Image Command Table

Execute command	Item
CF_BRIGHT_%1 [CR]	Set Brightness value
CF_CONT_%1 [CR]	Set Contrast value
CF_COLOR_%1 [CR]	Set Color value
CF_TINT_%1 [CR]	Set Tint value
CF_SHARP_%1 [CR]	Set Sharpness value
CF_GAMMA_%1 [CR]	Set Gamma value
CF_WBAL-R_%1 [CR]	Set White Balance Red value
CF_WBAL-G_%1 [CR]	Set White Balance Green value
CF_WBAL-B_%1 [CR]	Set White Balance Blue value
CF_COLTEMP_%1 [CR]	Set Color Temp. value
CF_PROGV_%1 [CR]	Set or Cancel for Progressive
CF_FILM_%1 [CR]	Set or Cancel for Film mode
CF_IMAGE_%1 [CR]	Set Image mode
CF_IMAGEADJ_%1 [CR]	Reset and Store for Image adjustment

5.2. PC Control Command Table

Execute command	Item
CF_FSYNC_%1 [CR]	Set Fine Sync value
CF_TDOTS_%1 [CR]	Set Total Dots value
CF_CLAMP_%1 [CR]	Set Clamp value
CF_H-POS_%1 [CR]	Set Horizontal Position value
CF_V-POS_%1 [CR]	Set Vertical Position value
CF_DDOTS_%1 [CR]	Set Display Dots value
CF_DLINE_%1 [CR]	Set Display Line value
CF_PCSTORE_%1 [CR]	Store current PC Adj. status to Mode1, 2, 3, 4, or 5
CF_PCMODEFREE_%1 [CR]	Reset Mode1, 2, 3, 4, and 5

5.3. Video Control Command Table

Execute command	Item
CF_AVDDOTS_%1 [CR]	Set Horizontal Resolution value
CF_AVDLINE_%1 [CR]	Set Vertical Resolution value
CF_AVHPOS_%1 [CR]	Set Horizontal Position value
CF_AVVPOS_%1 [CR]	Set Vertical Position value
CF_AVSERV_%1 [CR]	Reset Horizontal / Vertical Resolution that are set in such as CF_AVDDOTS / CF_AVDLINE to default setting.

5.4. Input Control Command Table

Execute command	Item
CF_INPUT_%1 [CR]	Select Input
CF_SOURCE_%1 [CR]	Select Input Sauce
CF_INPUT_%1_%2 [CR]	Select Input and Source
CF_SYSTEM_%1 [CR]	Select System

5.5. Screen Command Table

Execute command	Item
CF_SCREEN_%1 [CR]	Select Screen size
CF_FLSCREN_%1 [CR]	Set and Cancel Full Screen
CF_TRUE_%1 [CR]	Set and Cancel True for Screen
CF_DZCENT_%1 [CR]	Cancel Digital Zooms
CF_KEYSTONE_%1 [CR]	Set Keystone
CF_KYSTNMODE_%1 [CR]	Set Keystone Store mode

5.6. Lamp Command Table

Execute command	Item
CF_LAMPH_%1 [CR]	Reset Lamp total running time
CF_LAMPMODE_%1 [CR]	Select Lamp mode

5.7. Sound Command Table

Execute command	Item
CF_VOLUME_%1 [CR]	Set Volume value
CF_MUTE_%1 [CR]	Control Sound Mute On / Off

5.8. Setting Command Table

Execute command	Item
CF_BBACK_%1 [CR]	Set Blue Back function
CF_DISP_%1 [CR]	Set Display function
CF_LOGO_%1 [CR]	Set Logo function
CF_CEIL_%1 [CR]	Set Ceiling function
CF_REAR_%1 [CR]	Set Rear Function
CF_RCODE_%1 [CR]	Select Remote Control Reception Code
CF_LANG_%1 [CR]	Select OSD language
CF_ON-STA_%1 [CR]	Set Power On Start Function
CF_P-MANE_%1 [CR]	Set Power Management function
CF_P-MANETIME_%1 [CR]	Set Power Management time
CF_FANSPEED_%1 [CR]	Select Fan Speed
CF_KEYDIS_%1 [CR]	RC / KEY inhibit
CF_TERMINAL_%1 [CR]	Set Terminal
CF_STANDBYMODE_%1 [CR]	Set Standby mode
CF_POINTER_%1_%2[CR]	Set Pointer
CF_FDEFAULT_%1[CR]	Set Factory Default
CF_AUTOSETUP_%1_%2[CR]	Set Auto Setup
CF_LOGOCAPTURE_%1[CR]	Capture the current image on the screen
CF_FANMODE_%1[CR]	Select Fan mode

6. Status Read Command Table

6.1. Image Status Read Command Table

Status read command	Item
CR_BRIGHT [CR]	Read Brightness setting value
CR_CONT [CR]	Read Contrast setting value
CR_COLOR [CR]	Read Color seting value
CR_TINT [CR]	Read Tint setting value
CR_SHARP [CR]	Read Sharpness setting value
CR_GAMMA [CR]	Read Gamma setting value
CR_WBAL-R [CR]	Read White Balance Red value
CR_WBAL-G [CR]	Read White Balance Green value
CR_WBAL-B [CR]	Read White Balance Blue value
CR_COLTEMP [CR]	Read Color temperature setting
CR_PROGV [CR]	Read Progressive setting
CR_FILM [CR]	Read Film mode setting
CR_IMAGE [CR]	Read Image mode setting
CR_IMGGMD [CR]	Read Image-Gamma setting value

6.2. PC Status Read Command Table

Status read command	Item
CR_FSYNC [CR]	Read Fine Sync setting value
CR_TDOTS [CR]	Read Total Dots setting value
CR_CLAMP [CR]	Read Clamp setting value
CR_H-POS [CR]	Read Horizontal Position setting value
CR_V-POS [CR]	Read Vertical Position setting value
CR_DDOTS [CR]	Read Display Dots setting value
CR_DLINE [CR]	Read Display Line setting value
CR_PCSTORE [CR]	Read Free or Store is selected for PC Adj.; Mode1-5
CR_SETPCADJ [CR]	Read Current PC signal for PC display status

6.3. Video Status Read Command Table

Status read command	Item
CR_SERSYS [CR]	Read selected current signal. When in Auto mode, it returns a result by Auto detect.

6.4. Input Status Read Command Table

Status read command	Item
CR_INPUT [CR]	Read selected Input
CR_SOURCE [CR]	Read selected Input Source
CR_INPUT_%1 [CR]	Read Input and the Source
CR_SYSTEM [CR]	Read selected system status in Input mode

6.5. Screen Status Read Command Table

Status read command	Item
CR_SCREEN [CR]	Read selected screen size
CR_FLSCREN [CR]	Read Full screen mode
CR_TRUE [CR]	Read True mode setting
CR_KYSTNMODE [CR]	Read Keystone Store mode setting

6.6. Lamp Status Read Command Table

Status read command	Item
CR_LAMPREPL [CR]	Read information for Lamp replacement time
CR_LAMPMODE [CR]	Read Lamp mode status
CR_PROJH [CR]	Read Projector total running time

6.7. Sound Status Read Command Table

Status read command	Item
CR_VOLUME [CR]	Read Volume Value
CR_MUTE [CR]	Read Sound Mute setting

6.8. Setting Status Read Command Table

Status read command	Item
CR_BBACK [CR]	Read Blue Back setting
CR_DISP [CR]	Read Display setting
CR_LOGO [CR]	Read Logo setting
CR_RCODE [CR]	Read selected Remote Code
CR_LANG [CR]	Read selected Language
CR_ON-STA [CR]	Read On Start setting status
CR_P-MANE [CR]	Read Power Management setting status
CR_P-MANETIME [CR]	Read the start time for Power Management
CR_FANSPEED [CR]	Read selected FAN Control Speed
CR_KEYDIS [CR]	Read RC/KEY Prohibit status
CR_TERMINAL [CR]	Read Terminal setting status
CR_STANDBYMODE [CR]	Read Standby mode setting status
CR_POINTER [CR]	Read Pointer setting status
CR_AUTOSETUP_%1 [CR]	Read Auto Setup setting status
CR_FANMODE [CR]	Read selected Fan mode

6.9. Other Status Read Command Table

Status read command	Item
CR_SIGNAL [CR]	Read the status if there is signal or no signal
CR_VMUTE [CR]	Read No Show setting status
CR_FREEZE [CR]	Read Freeze setting status
CR_PTIMER [CR]	Read P-Timer operational status
CR_TEMPWARN [CR]	Read if sensors are exceeding critical temperature or not
CR_TEMPFAIL [CR]	Read the temperature when sensors approached critical temperature

7. Error Code Table

Error Code	Content
?	When receives data that cannot be decoded. Parameter determination error. (Digit number error, and incorrect letter included)
000	Normal Reception. (Not error)
101	The function is not available in the selected Mode.
102	Selected the value is out of range. (Selected value will not be reflected)
103	Command mismatched to the Hardware. (Command for unpopulated option function)
201	When sending command, the increment is maximum value or the decrement is minimum value.
301	Processing image capture. Re-try it again later.
302	Processing Auto setup, not executable. Re-try it again later.
303	Processing Memory Card Viewer. Re-try it again later.
402	Processing PIN Code, not executable. Re-try it again later.

Note) This error code for Expand Command, not applicable for Basic Command.

8. Functional Execution Command

8.1. Format

1) The following format's commands issued form a PC.

Pattern 1: "CF_COMMAND" [CR]

Pattern 2: "CF_COMMAND_" %1 [CR]

CF_: Header

COMMAND: Letters

%1: Parameter (Letters)

_: Space (To separate COMMAND and Parameter)

2) When a projector decoded a received data and ready to receive the next Command, it will return acknowledgment.

"000" [CR]: (0x06, 0x0D) When received Function Execute Command.

"nnn" [CR]: Unable to execute any value except "000" value for any specific reason.

See the Error Code Table for its contents

3) When received an undecodable data,

returns **"?" [CR].**

8.2. Transfer Example

When setting Projector Total Dots to 1344 by Expand Command

PC → Projector: "CF_TDOTS_1344" [CR]

Projector → PC: "000" [CR] ---------- Reception OK

8.3. Operation Requirements

When the Projector's status in this below, functional execution commands are limited.

Status Read Commands are available even in this table status.

Projector Status	Available Function Execution Command
Standby Mode	C00: Power On
Processing Count Down	C00: Power On (Terminate Count Down)
Processing Cooling Down	None
Cooling Down due to abnormal temperature	None
Abnormal Temperature	None
Abnormal Power (60sECOnds after Power has turned to abnormal)	None
Processing Power Save Cooling Down	None
Processing Power Save	C00: Power On C01: Power Off

Note) When the Projector receives other commands in the above status, they return error code to show the status.

8.4. Image Command

8.4.1. CF_BRIGHT Command

Command	"CF"_BRIGHT_%1" [CR]	
%1	"000 – 063" ---------- Directly select the Bright setting value "UP" ---------- Bright setting value +1 "DN" ---------- Bright setting value -1	
Details	Set the user control Bright value. The value set by the command will not be saved to the Projector. Therefore, when AC Power Off the Projector, the value will return to the original setting. (For Standby mode, this value stays) Only valid when it is in the usual Power On state.	
Response	Acceptable	"000" [CR]
	Unacceptable	"Error Code" [CR]

8.4.2. CF_CONT Command

Command	"CF_CONT_%1" [CR]	
%1	"000 – 063" ---------- Directly select the Contrast setting value "UP" ---------- Contrast setting value +1 "DN" ---------- Contrast setting value -1	
Details	Set the user control Contrast value. The value set by the command will not be saved to the Projector. Therefore, when AC Power Off the Projector, the value will return to the original setting. (For Standby mode, this value stays) Only valid when it is in the usual Power On state.	
Response	Acceptable	"000" [CR]
	Unacceptable	"Error Code" [CR]

8.4.3. CF_COLOR Command

Command	"CF_COLOR_%1" [CR]	
%1	"000 – 063" ---------- Directly select the Color setting value "UP" ---------- Color setting value +1 "DN" ---------- Color setting value -1	
Details	Set the user control Color value. The value set by the command will not be saved to the Projector. Therefore, when AC Power Off the Projector, the value will return to the original setting. (For Standby mode, this value stays) Only valid when it is in the usual Power On state.	
Response	Acceptable	"000" [CR]
	Unacceptable	"Error Code" [CR]

8.4.4. CF_TINT Command

Command	"CF_TINT_%1" [CR]	
%1	"000 – 063" ---------- Directly select the Tint setting value "UP" ---------- Tint setting value +1 "DN" ---------- Tint setting value -1	
Details	Set the user control Tint value. The value set by the command will not be saved to the Projector. Therefore, when AC Power Off the Projector, the value will return to the original setting. (For Standby mode, this value stays) Only valid when it is in the usual Power On state.	
Response	Acceptable	"000" [CR]
	Unacceptable	"Error Code" [CR]

8.4.5. CF_SHARP Command

Command	"CF_SHARP_%1" [CR]	
%1	"000 – 015" ---------- Directly select the Sharpness setting value "UP" ---------- Sharpness setting value +1 "DN" ---------- Sharpness setting value -1	
Details	Set the user control Sharpness value. The value set by the command will not be saved to the Projector. Therefore, when AC Power Off the Projector, the value will return to the original setting. (For Standby mode, this value stays) Only valid when it is in the usual Power On state.	
Response	Acceptable	"000" [CR]
	Unacceptable	"Error Code" [CR]

8.4.6. CF_GAMMA Command

Command	"CF_GAMMA_%1" [CR]	
%1	"000 – 015" ---------- Directly select the Gamma setting value "UP" ---------- Gamma setting value +1 "DN" ---------- Gamma setting value -1	
Details	Set the user control Gamma value. The value set by the command will not be saved to the Projector. Therefore, when AC Power Off the Projector, the value will return to the original setting. (For Standby mode, this value stays) Only valid when it is in the usual Power On state.	
Response	Acceptable	"000" [CR]
	Unacceptable	"Error Code" [CR]

8.4.7. CF_WBAL- Command

Command	"CF_WBAL-%1_%2" [CR]	
%1	"R" ---------- Red "G" ---------- Green "B" ---------- Blue	
%2	"000 – 063" ------- Directly select color value by White Balance %1 determination "UP" ---------- Color value for White Balance %1 determination +1 "DN" ---------- Color value for White Balance %1 determination -1	
Details	Set the user control value by White Balance %1 determination. The value set by the command will not be saved to the Projector. Therefore, when AC Power Off the Projector, the value will return to the original setting. (For Standby mode, this value stays) Only valid when it is in the usual Power On state.	
Response	Acceptable	"000" [CR]
	Unacceptable	"Error Code" [CR]

8.4.8. CF_COLTEMP Command

Command	"CF_COLTEMP_%1" [CR]	
%1	"000" ---------- Xlow "001" ---------- Low "002" ---------- Mid "003" ---------- High	
Details	Set the Color Temp. The value set by the command will not be saved to the Projector. Therefore, when AC Power Off the Projector, the value will return to the original setting. (For Standby mode, this value stays) Only valid when it is in the usual Power On state.	
Response	Acceptable	"000" [CR]
	Unacceptable	"Error Code" [CR]

8.4.9 CF_PROGV Command

Command	"CF_PROGV_%1" [CR]	
%1	"L1" ---------- Select Progressive Mode L1 "L2" ---------- Select Progressive Mode L2 "OFF" ---------- Cancel Progressive	
Details	Set / Cancel for Progressive. The value set by the command will not be saved to the Projector. Therefore, when AC Power Off the Projector, the value will return to the original setting. (For Standby mode, this value stays) Only valid when it is in the usual Power On state.	
Response	Acceptable	"000" [CR]
	Unacceptable	"Error Code" [CR]

8.4.10. CF_FILM Command

Command	"CF_FILM_%1" [CR]	
%1	"ON" ---------- Film Mode ON "OFF" ---------- Film Mode OFF	
Details	Set / Cancel for Film Mode. The value set by the command will not be saved to the Projector. Therefore, when AC Power Off the Projector, the value will return to the original setting. (For Standby mode, this value stays) Only valid when it is in the usual Power On state.	
Response	Acceptable	"000" [CR]
	Unacceptable	"Error Code" [CR]

8.4.11. CF_IMAGE コマンド

Command	"CF_IMAGE_%1" [CR]	
%1	"DYNAMIC" ---------- Dynamic mode "STAND" ---------- Standard mode "REAL" ---------- Real mode "CINEMA" ---------- Cinema mode "BLACKBOARD" --------- Blackboard (Green) mode "CUSTOM1" ---------- Image1 mode "CUSTOM2" ---------- Image2 mode "CUSTOM3" ---------- Image3 mode "CUSTOM4" ---------- Image4 mode	
Details	Select Image mode. (When it is in usual Power On state, this is valid) Parameter "CUSTOM1" – "CUSTOM4" is the same as selecting "Image1" – "Image4" on OSD menu. The value set by this Command is stored in EEEPROM, when AC Power Off the Projector the value will be valid.	
Response	Acceptable	"000" [CR]
	Unacceptable	"Error Code" [CR]

8.4.12. CF_IMAGEADJ Command

Command	"CF_IMAGEADJ_%1" [CR]	
%1	"RST" ---------- Reset Image adjustment "STR1" ---------- Store cullent Image adjustment to Image1 mode "STR2" ---------- Store cullent Image adjustment to Image2 mode "STR3" ---------- Store cullent Image adjustment to Image3 mode "STR4" ---------- Store cullent Image adjustment to Image4 mode	
Details	Reset / Store for Image adjustment. (When it is in usual Power On state, this is valid) "STR1" – "STR4" is the same as "Image1" – "Image4" when choosing "Store" on OSD menu. The setting value set in "Custom" is stored, so even if the Projector is set to AC Power Off and is turned on again, the setting value will be able to be back.	
Response	Acceptable	"000" [CR]
	Unacceptable	"Error Code" [CR]

8.5. PC Control Command

8.5.1. CF_FSYNC Command

Command	"CF_FSYNC_%1" [CR]	
%1	"0000 – 0031" --------- Directly set Fine Sync setting value "UP" ---------- Fine Sync setting value +1 "DN" ---------- Fine Sync setting value -1	
Details	Set Fine Sync for PC signal. (When it is in usual Power On state, this is valid) The value set by the command will not be saved to the Projector. Therefore, when AC Power Off the Projector, the value will return to the original setting. (For Standby mode, this value stays)	
Response	Acceptable	"000" [CR]
	Unacceptable	"101" [CR] ---- Input is Video

8.5.2. CF_TDOTS Command

Command	"CF_TDOTS_%1" [CR]	
%1	"nnnn – 9999" -------- Directly set Total Dots setting value "nnnn" is minimum value. This is current Display Dots value+Horizontal position value "UP" ---------- Total Dots setting value +1 "DN" ---------- Total Dots setting value –1	
Details	Set Total Dots for PC signal. (When it is in usual Power On state, this is valid) The value set by the command will not be saved to the Projector. Therefore, when AC Power Off the Projector, the value will return to the original setting. (For Standby mode, this value stays)	
Response	Acceptable	"000" [CR]
	Unacceptable	"101" [CR] ---- Input is Video

8.5.3. CF_CLAMP Command

Command	"CF_CLAMP_%1" [CR]	
%1	"0000 – 0127" --------- Directly set Clamp setting value "UP" ---------- Clamp setting value +1 "DN" ---------- Clamp setting value –1	
Details	Set Clamp PC signal. (When it is in usual Power On state, this is valid) The value set by the command will not be saved to the Projector. Therefore, when AC Power Off the Projector, the value will return to the original setting. (For Standby mode, this value stays)	
Response	Acceptable	"000" [CR]
	Unacceptable	"101" [CR] ---- Input is Video

8.5.4. CF_H-POS Command

Command	"CF_H-POS_%1" [CR]	
%1	"0000 – nnnn" ---------- Directly set Horizontal Position setting value "nnnn" is maxmum value. This is current Total Dots value - Display Dots value. "UP" ---------- Horizontal Position setting value +1 "DN" ---------- Horizontal Position setting value –1	
Details	Set Horizontal Position PC signal. (When it is in usual Power On state, this is valid) The value set by the command will not be saved to the Projector. Therefore, when AC Power Off the Projector, the value will return to the original setting. (For Standby mode, this value stays)	
Response	Acceptable	"000" [CR]
	Unacceptable	"101" [CR] ---- Input is Video

8.5.5. CF_V-POS Command

Command	"CF_V-POS_%1" [CR]	
%1	"0000 – nnnn" ---------- Directly set Vertical Position setting value "nnnn" is maxmum value. This is current Total Line value - Display Line value. "UP" ---------- Vertical Position setting value +1 "DN" ---------- Vertical Position setting value –1	
Details	Set Vertical Position PC signal. (When it is in usual Power On state, this is valid) The value set by the command will not be saved to the Projector. Therefore, when AC Power Off the Projector, the value will return to the original setting. (For Standby mode, this value stays)	
Response	Acceptable	"000" [CR]
	Unacceptable	"101" [CR] ---- Input is Video

8.5.6. CF_DDOTS Command

Command	"CF_DDOTS_%1" [CR]	
%1	"0100 – nnnn" --------- Directly set Display Dots setting value "nnnn" is maxmum value. This is current Total Dots value – Horizontal Position value. "UP" ---------- Display Dots setting value +1 "DN" ---------- Display Dots setting value –1	
Details	Set Display Dots PC signal. (When it is in usual Power On state, this is valid) The value set by the command will not be saved to the Projector. Therefore, when AC Power Off the Projector, the value will return to the original setting. (For Standby mode, this value stays)	
Response	Acceptable	"000" [CR]
	Unacceptable	"101" [CR] ---- Input is Video

8.5.7. CF_DLINE Command

Command	"CF_DLINE_%1" [CR]	
%1	"0100 – nnnn" --------- Directly set Display Line setting value "nnnn" is maxmum value. This is current Total Line value – Vertical Position value. "UP" ---------- Display Line setting value +1 "DN" ---------- Display Line setting value –1	
Details	Set Display Line PC signal. (When it is in usual Power On state, this is valid) The value set by the command will not be saved to the Projector. Therefore, when AC Power Off the Projector, the value will return to the original setting. (For Standby mode, this value stays)	
Response	Acceptable	"000" [CR]
	Unacceptable	"101" [CR] ---- Input is Video

8.5.8. CF_PCSTORE Command

Command	"CF_PCSTORE"_%1" [CR]	
%1	"MODE1" ---------- Store current PC Adjust status to Mode 1 "MODE2" ---------- Store current PC Adjust status to Mode 2 "MODE3" ---------- Store current PC Adjust status to Mode 3 "MODE4" ---------- Store current PC Adjust status to Mode 4 "MODE5" ---------- Store current PC Adjust status to Mode 5	
Details	Store current PC Adjust status (each parameter status such as Total dots) to Mode 1 – 5. This command operates the same operation as storing to Mode1 – Mode5 in PC Adjust Menu. (Only valid when it is in the usual Power On status)	
Response	Acceptable	"000" [CR]
	Unacceptable	"101" [CR] ---- Input is Video

8.5.9. CF_PCMODEFREE Command

Command	"CF_PCMODEFREE_%1" [CR]	
%1	"MODE1" -------- Mode 1 to Free "MODE2" -------- Mode 2 to Free "MODE3" -------- Mode 3 to Free "MODE4" -------- Mode 4 to Free "MODE5" -------- Mode 5 to Free	
Details	Reset Mode 1, 2, 3, 4, and 5 to Free. This command works as the same when resetting Modes in PC adjust menu. (Only valid when it is in the usual Power On status)	
Response	Acceptable	"000" [CR]
	Unacceptable	"101" [CR] ---- Input is Video

8.6. Video Control Command

8.6.1. CF_AVDDOTS Command

Command	"CF_AVDDOTS_%1" [CR]	
%1	"UP" ---------- Current setting value +1 "DN" ---------- Current setting value –1	
Details	Set AV Service Mode Horizontal Resolution value. (Only valid when it is in the usual Power On status) This setting status is stored in EEPROM, hold even if AC Power turning Off and On. When there e is no signal, the Projector returns "101" [CR].	
Response	Acceptable	"000" [CR]
	Unacceptable	"101" [CR] ---- Input is PC

8.6.2. CF_AVDLINE Command

Command	"CF_AVDLINE_%1" [CR]	
%1	"UP" ---------- Current setting value +1 "DN" ---------- Current setting value –1	
Details	Set AV Service Mode Vertical Resolution value. (Only valid when it is in the usual Power On status) This setting status is stored in EEPROM, hold even if AC Power turning Off and On. When there e is no signal, the Projector returns "101" [CR].	
Response	Acceptable	"000" [CR]
	Unacceptable	"101" [CR] ---- Input is PC

8.6.3. CF_AVHPOS Command

Command	"CF_AVHPOS_%1" [CR]	
%1	"UP" ---------- Current setting value +1 "DN" ---------- Current setting value –1	
Details	Set AV Service Mode Horizontal Position value. (Only valid when it is in the usual Power On status) This setting status is stored in EEPROM, hold even if AC Power turning Off and On. When there e is no signal, the Projector returns "101" [CR].	
Response	Acceptable	"000" [CR]
	Unacceptable	"101" [CR] ---- Input is PC

8.6.4. CF_AVVPOS Command

Command	"CF_AVVPOS_%1" [CR]	
%1	"UP" ---------- Current setting value +1 "DN" ---------- Current setting value –1	
Details	Set AV Service Mode Vertical Position value. (Only valid when it is in the usual Power On status) This setting status is stored in EEPROM, hold even if AC Power turning Off and On. When there e is no signal, the Projector returns "101" [CR].	
Response	Acceptable	"000" [CR]
	Unacceptable	"101" [CR] ---- Input is PC

8.6.5. CF_AVSERV Command

Command	"CF_AVSERV_%1" [CR]	
%1	"RST"	
Details	Set AV Horizontal / Vertical resolution that is set in such as "CF_AVDDOTS" / "CF_AVDLINE" to default setting value. (Only valid when it is in the usual Power On status) This setting status is stored in EEPROM, hold even if AC Power turning Off and On. When there e is no signal, the Projector returns "101" [CR].	
Response	Acceptable	"000" [CR]
	Unacceptable	"101" [CR] ---- Input is PC

8.7. Input Control Command

8.7.1. CF_INPUT Command

Command	"CF_INPUT_%1" [CR]	
%1	"COMPUTER1" --------- Select Computer 1 Input "COMPUTER2" --------- Select Computer 2 Input "VIDEO" ---------- Select Video Input	
Details	Select Input. (Only valid when it is in the usual Power On status) The Command works as the same as the Projector or Remote Control unit "INPUT" button. Note1) If trying to select COMPUTER-2 terminal when setting Computer-2 to Monitor Out, the Projector returns "101". Note2) When option box is installed, the selection of Computer-1 is Memory Card / Wireless / Network.	
Response	Acceptable	"000" [CR]
	Unacceptable	"%%%" [CR]

8.7.2. CF_SOURCE Command

Command	"CF_SOURCE_%1" [CR]	
%1	Computer 1	"DIGITAL" --------- Select Digital Input "ANALOG" -------- Select Analog Input "HDCP" ---------- Select DVI HDCP Input
	Computer 2	"ANALOG" --------- Select RGB Input "YPBPR" ---------- Select Component Input "SCART" ---------- Select SCART RGB Input
	Video	"AUTO" ---------- Select Vide Auto mode "VIDEO" ---------- Select Composite Video Input "S-VIDEO" --------- Select S-Video Input
Details	Select current input source. (Only valid when it is in the usual Power On status) When selected Input and specified %1 are not matched, the Projector returns "101" and does not execute the command. Note) When the optional MCI Box is installed to COMPUTER-1, selection for source is invalid. Error Code is "101".	
Response	Acceptable	"000" [CR]
	Unacceptable	"%%%" [CR]

8.7.3. CF_INPUT_%1_%2 Command

Command	"CF_INPUT_%1_%2" [CR]	
%1	"COMPUTER1" ---------- Select Computer 1 Input "COMPUTER2" ---------- Select Computer 2 Input "VIDEO" ---------- Select Video Input	
%2	When %1 is COMPUTER1 "ANALOG" ---------- Select Analog RGB Input "DIGITAL" ---------- Select Digital Input "HDCP" ---------- Select DVI HDCP Input When %1 is COMPUTER2 "ANALOG" ---------- Select RGB Input "YPBPR" ---------- Select Component Input "SCART" ---------- Select SCART RGB Input When %1 is VIDEO "AUTO" ---------- Select Video Auto mode "VIDEO" ---------- Select Video "S-VIDEO" ---------- Select S-Video	
Details	Select Input and also the source that is specified in %2. (Only valid when it is in the usual Power On status)	
Response	Acceptable	"000" [CR]
	Unacceptable	"%%%" [CR]

8.7.4. CF_SYSTEM Command

Command	"CF_SYSTEM_%1" [CR]	
%1	PC Input	"MODE1" ---------- Select Mode 1 "MODE2" ---------- Select Mode 2 "MODE3" ---------- Select Mode 3 "MODE4" ---------- Select Mode 4 "MODE5" ---------- Select Mode 5
	Video Input	"AUTO" ---------- Select Auto System "NTSC" ---------- Select NTSC "NTSC443" -------- Select NTSC4.43 "PAL" ---------- Select PAL "SECAM" ---------- Select SECAM "PAL-M" ---------- Select PAL-M "PAL-N" ---------- Select PAL-N "1080I" ---------- Select 1080i "1035I" ---------- Select 1035i "720P" ---------- Select 720p "575P" ---------- Select 575p "480P" ---------- Sekect 480p "575I" ---------- Select 575i "480I" ---------- Select 480i
Details	Select System for current Input mode. (Only valid when it is in the usual Power On status) When Input does not meet the requirement for specified %1, the response will be "101" and the Command does not execute. Note1) "NTSC" / "NTSC4.43" / "PAL" / "SECAM" / "PAL-M" / "PAL-N" is available only when Input Video or S-Video. Note2) "1080I" / "1035I" / "720p" / "575P" / "480P" / "575I" / "480I" is available only when Input is Y, Pb/Cb, Pr/Cr.	
Response	Acceptable	"000" [CR]
	Unacceptable	"Error Code" [CR]

8.8. Screen Copntrol Command

8.8.1. CF_SCREEN Command

Command	"CF_SCREEN_%1" [CR]	
%1	PC Input	"NORMAL" ---------- Select Normal (4:3) "WIDE" ---------- Select Wide (16:9) "TRUE" ---------- Select True "DZOOM_UP" ---------- Up to Digital Zoom "DZOOM_DN" ---------- Down to Digital Zoom
	Video Input	"NORMAL" ---------- Select Normal (4:3) "WIDE" ---------- Select Wide (16:9)
Details	Select Screen size. (Only valid when it is in the usual Power On status) When Input does not meet the requirement for the specified %1, the response will be "101" [CR], and the Command is not executed. Note) "WIDE" / "NORMAL" dose valid when Input signal is only 4:3. Unvalid 16:9 signal.	
Response	Acceptable	"000" [CR]
	Unacceptable	"Error Code" [CR]

8.8.2. CF_FLSCREN Command

Command	"CF_FLSCREN_%1" [CR]	
%1	"ON" ---------- Select Full Screen "OFF" ---------- Cancel Full Screen	
Details	PC Input	Set / Cancel Full Screen. (Only valid when it is in the usual Power On status) The value set by this Command will not be saved to the Projector. Therefore, when AC Power Off the Projector, the value will return to the original setting. (Stay in Standby mode)
	Video Input	Unvalid
Response	Acceptable	"000" [CR]
	Unacceptable	"Error Code" [CR]

8.8.3. CF_TRUE Command

Command	"CF_TRUE_%1" [CR]	
%1	"ON" ---------- Select True mode "OFF" --------- Cancel True mode	
Details	Set / Cancel True mode Only valid when it is in the usual Power On state and Input is Computer.	
Response	Acceptable	"000" [CR]
	Unacceptable	"101" [CR] ------ Input is Video

8.8.4. CF_DZCENT Command

Command	"CF_DZCENT_%1" [CR]	
%1	"CENT" ---------- Cancel Digital Zoom (CENT: "CENTER")	
Details	Cancel Digital Zoom. Only valid when it is in the usual Power On state and Input is Computer.	
Response	Acceptable	"000" [CR]
	Unacceptable	"101" [CR] ------ Input is Video

8.8.5. CF_KEYSTONE Command

Command	"CF_KEYSTONE_%1" [CR]	
%1	"UP" ---------- Make the screen image length at the top edge shorter with small range. "FUP" --------- Make the screen image length at the top edge shorter with large range. "DN" ---------- Make the screen image length at the bottom edge shorter with small range. "FDN" -------- Make the screen image length at the bottom edge shorter with large range. "LEFT" -------- Make the screen image length at the left edge shorter with small range. "FLFT" ------- Make the screen image length at the left edge shorter with large range. "RIGHT" ---- Make the screen image length at the right edge shorter with small range. "FRGT" ------ Make the screen image length at the right edge shorter with large range. "RST" --------- Keystone off	
Details	Change Keystone range. (Only valid when it is in the usual Power On status)	
Response	Acceptable	"000" [CR]
	Unacceptable	"Error Code" [CR] "201" [CR] ---- When Keysotne value is maximum or minimum.

8.8.6. CF_KYSTNMODE Command

Command	"CF_KYSTNMODE_%1" [CR]	
%1	"STR" ---------- Set Keystone store Mode to Store "RST" ---------- Set Keystone store Mode to Reset	
Details	Set Keystone store Mode. (Only valid when it is in the usual Power On status)	
Response	Acceptable	"000" [CR]
	Unacceptable	"Error Code" [CR]

8.9. Lamp Command

8.9.1. CF_LAMPH Command

Command	"CF_LAMPH_%1" [CR]	
%1	"RST"	
Details	Reset total lamp running time. (Only valid when it is in the usual Power On status)	
Response	Acceptable	"000" [CR]
	Unacceptable	"Error Code" [CR]

8.9.2. CF_LAMPMODE Command

Command	"CF_LAMPMODE_%1" [CR]	
%1	"NORMAL" ---------- Set Lamp Mode to Normal "ECO" ---------- Set Lamp Mode to Eco "AUTO" ---------- Set Lamp Mode to Auto	
Details	Select Lamp Mode. (Only valid when it is in the usual Power On status) This setting status is stored in EEPROM, hold even if AC Power turning Off and On.	
Response	Acceptable	"000" [CR]
	Unacceptable	"Error Code" [CR]

8.10. Sound Command

8.10.1. CF_VOLUME Command

Command	"CF_VOLUME_%1" [CR]	
%1	"000 – 063" ---------- Directly set Volume value "UP" ---------- Volume setting value +1 "DN" ---------- Volume setting value -1	
Details	Control Volume setting value. (Only valid when it is in the usual Power On status) The same operation as a Remote Control's turning up/down the volume. Also, the Command directly sets the volume value. When setting volume value like Remote Control Unit operation, Sound Mute On will be canceled. The setting value will be stored in a Projector.	
Response	Acceptable	"000" [CR]
	Unacceptable	"Error Code" [CR]

8.10.2. CF_MUTE Command

Command	"CF_MUTE_%1" [CR]	
%1	"ON" --------- Sound Mute On "OFF" ------- Sound Mute Off	
Details	Control Sound Mute On/Off. (Only valid when it is in the usual Power On status)	
Response	Acceptable	"000" [CR]
	Unacceptable	"Error Code" [CR]

8.11. Setting Command

8.11.1. CF_BBACK Command

Command	"CF_BBACK_%1" [CR]	
%1	"ON" --------- Set Blue Back "OFF" ------- Cancel Blue Back	
Details	Set / Cancel Blue Back. (Only valid when it is in the usual Power On status) This setting status is stored in EEPROM, hold even if AC Power turning Off and On.	
Response	Acceptable	"000" [CR]
	Unacceptable	"Error Code" [CR]

8.11.2. CF_DISP Command

Command	"CF_DISP_%1" [CR]	
%1	"ON" --------- Set Display "OFF" ------- Cancel Display	
Details	Set / Cancel Display. (Only valid when it is in the usual Power On status) This setting status is stored in EEPROM, hold even if AC Power turning Off and On.	
Response	Acceptable	"000" [CR]
	Unacceptable	Error Code" [CR]

8.11.3. CF_LOGO Command

Command	"CF_LOGO_%1" [CR]	
%1	"OFF" ---------- Cancel Logo "DEFAULT" --------- Set Default Logo display "USER" ---------- Set Captured Logo display	
Details	Set / Cancel Logo. (Only valid when it is in the usual Power On status) This setting status is stored in EEPROM, hold even if AC Power turning Off and On.	
Response	Acceptable	"000" [CR]
	Unacceptable	"Error Code" [CR]

8.11.4. CF_CEIL Command

Command	"CF_CEIL_%1" [CR]	
%1	"ON" --------- Select Ceiling "OFF" -------- Cancel Ceiling	
Details	Set / Cancel Ceiling. (Only valid when it is in the usual Power On status) This setting status is stored in EEPROM, hold even if AC Power turning Off and On.	
Response	Acceptable	"000" [CR]
	Unacceptable	"Error Code" [CR]

8.11.5. CF_REAR Command

Command	"CF_REAR_%1" [CR]	
%1	"ON" --------- Select Rear "OFF" --------- Cancel Rear	
Details	Set / Cancel Rear. (Only valid when it is in the usual Power On status) When Rear is On, it will be a mirror-reversed image. This setting status is stored in EEPROM, hold even if AC Power turning Off and On.	
Response	Acceptable	"000" [CR]
	Unacceptable	"Error Code" [CR]

8.11.6. CF_RCODE Command

Command	"CF_RCODE_%1" [CR]	
%1	"001" ---------- Select Code1 "002" ---------- Select Code2 "003" ---------- Select Code3 "004" ---------- Select Code4 "005" ---------- Select Code5 "006" ---------- Select Code6 "007" ---------- Select Code7 "008" ---------- Select Code8	
Details	Select Remote Control Code. (Only valid when it is in the usual Power On status) This setting status is stored in EEPROM, hold even if AC Power turning Off and On.	
Response	Acceptable	"000" [CR]
	Unacceptable	"Error Code" [CR]

8.11.7. CF_LANG Command

Command	"CF_LANG_%1" [CR]	
%1	"ENG" ---------- Select English "DEU" ---------- Select German "FRA" ---------- Select French "ITA" ---------- Select Italy "ESP" ---------- Select Spanish "POR" ---------- Select Portuguese "NED" ---------- Select Dutch "SVE" ---------- Select Swedish "RUS" ---------- Select Russian "CHI" ---------- Select Chinese "KOR" ---------- Select Korean "JPN" ---------- Select Japanese	
Details	Set OSD Language. (Only valid when it is in the usual Power On status) This setting status is stored in EEPROM, hold even if AC Power turning Off and On.	
Response	Acceptable	"000" [CR]
	Unacceptable	"Error Code" [CR]

8.11.8. CF_ON-STA Command

Command	""CF_ON-STA_%1" [CR]	
%1	"ON" -------- Select Power On Start "OFF" ------- Cancel Power On Start	
Details	Set / Cancel Power ON Start. (Only valid when it is in the usual Power On status) This setting status is stored in EEPROM, hold even if AC Power turning Off and On.	
Response	Acceptable	"000" [CR]
	Unacceptable	"Error Code" [CR]

8.11.9. CF_P-MANE Command

Command	"CF_P-MANE_%1" [CR]	
%1	"OFF" ---------- Set Power Management to Off "READY" ---------- Set Power Management to Ready "SHUTDOWN" ---- Set Power Management to Shut Down	
Details	Set / Cancel Power management. (Only valid when it is in the usual Power On status) This setting status is stored in EEPROM, hold even if AC Power turning Off and On.	
Response	Acceptable	"000" [CR]
	Unacceptable	"Error Code" [CR]

8.11.10. CF_P-MANETIME Command

Command	"CF_P-MANETIME_%1" [CR]	
%1	"01" – "30" --------- Directly set the time by the minute "UP" ---------- Set the time 1 minute longer "DN" ---------- Set the time 1 minute shorter	
Details	Set Power Management time. (Only valid when it is in the usual Power On status) This setting status is stored in EEPROM, hold even if AC Power turning Off and On.	
Response	Acceptable	"000" [CR]
	Unacceptable	"Error Code" [CR]

8.11.11 CF_FANSPEED Command

Command	"CF_FANSPEED_%1" [CR]	
%1	"MAX" --------- Select Maximum speed "NOR" ---------- Select Normal speed	
Details	Change Fan Control speed. (Only valid when it is in the usual Power On status) This setting status is stored in EEPROM, hold even if AC Power turning Off and On.	
Response	Acceptable	"000" [CR]
	Unacceptable	"Error Code" [CR]

8.11.12. CF_KEYDIS Command

Command	"CF_KEYDIS_%1" [CR]	
%1	"NONE" ---------- RC and KEY are available "RC" ---------- Keylock RC "KEY" ---------- Keylock Unit	
Details	Set Keylock the RC / KEY. (Only valid when it is in the usual Power On status)	
Response	Acceptable	"000" [CR]
	Unacceptable	"Error Code" [CR]

8.11.13. CF_TERMINAL Command

Command	"CF_TERMINAL_%1" [CR]	
%1	"COMPUTER" -------- Set Input mode "MONITOR" ---------- Set Monitor Output	
Details	Set Terminal. (Only valid when it is in the usual Power On status) In this model, Terminal is COMPTUER2.	
Response	Acceptable	"000" [CR]
	Unacceptable	"Error Code" [CR]

8.11.14. CF_STANDBYMODE Command

Command	"CF_STANDBYMODE_%1" [CR]	
%1	"ECO" ---------- Standby power requirement is smaller "NORMAL" ----- Normal Standby power requirement	
Details	Set Standby mode. (Only valid when it is in the usual Power On status)	
Response	Acceptable	"000" [CR]
	Unacceptable	"Error Code" [CR]

8.11.15. CF_POINTER Command

Command	"CF_POINTER_%1_%2" [CR]	
%1	"SPOTLIGHT" --------- Select Spotlight "ARROW" ---------- Select Arrow "FINGER" ---------- Select Finger "LASER" ---------- Select Laser mark	
%2	"MAX" ---------- Maximum Spotlight "MID" ---------- Medium Spotlight "MIN" ---------- Minimum Spotlight	
Details	Select Pointer image. (Only valid when it is in the usual Power On status) Note1) %2 is available when "SPOTLIGHT" is specified only. When "ARROW" / "FINGER" / "LASER", specify "CF_POINTER_%1" [CR] Note2) When "SPOTLIGHT", %2 cannot be omitted.	
Response	Acceptable	"000" [CR]
	Unacceptable	"Error Code" [CR]

8.11.16. CF_FDEFAULT Command

Command	"CF_FDEFAULT_%1" [CR]	
%1	"RST"	
Details	Set Factory Default. (Only valid when it is in the usual Power On status)	
Response	Acceptable	"000" [CR]
	Unacceptable	"Error Code" [CR]

8.11.17. CF_AUTOSETUP Command

Command	"CF_AUTOSETUP_%1_%2" [CR]	
%	%1	%2
	"KEYSTONE"	"AUTO" ---------- Auto setting for Auto Keystone "MANUAL" ----- Manual setting for Auto Keystone "OFF" ---------- Off for Auto Keystone
	"PCADJ"	"ON" ---------- On for Auto PC Adj. "OFF" ---------- Off for Auto PC Adj.
	"START"	None
Details	Select Auto Setup function. (Only valid when it is in the usual Power On status) Note1) When started Auto Setup, can not doing CF Command during end of Auto Setup. In this bout, return error code "302" if send out command. Note2) Can not "OFF" the both KEYSTONE and PCADJ. When KEYSTONE or PCADJ is "OFF", return error code "101" if set Keystone or PCADJ.	
Response	Acceptable	"000" [CR]
	Unacceptable	"Error Code" [CR]

8.11.18. CF_LOGOCAPTURE Command

Command	"CF_LOGOCAPTURE_%1" [CR]	
%1	"START" ---------- Capture On	
Details	Capture the current image on screen. When beginning to capture the image, any command is not available until the capture has done. When sending the command during the process, the Projector returns the error code, "301".	
Response	Acceptable	"000" [CR]
	Unacceptable	"Error Code" [CR]

8.11.19. CF_FANMODE Command

Command	"CF_FANMODE_%1" [CR]	
%1	"L1" -------- Select Fan mode L1 "L2" -------- Select Fan mode L2	
Details	Select Fan mode. (Only valid when it is in the usual Power On status) When select "L1", more fan noise at power off. When select "L2", go quiet fan noise at power off. However, Fan movement is more time than "L1". This setting status is stored in EEPROM, hold even if AC Power turning Off and On.	
Response	Acceptable	"000" [CR]
	Unacceptable	"Error Code" [CR]

9. Status Read Command

9.1. Format

1) PC issues Commands as below

"CR_COMMAND" [CR]

COMMAND: Character Line

2) When Projector receives the appropriate Command, it returns a character line as the required data.

"000_%1" [CR]

%1: Required Data (character line)

3) When receiving data cannot be decode, the Projector returns **"?" [CR]**

9.2. Transfer Example

Get Total Dots of Projector by expand Commands

PC → Projector: "CR_TDOTS" [CR]

PC ← Projector: "000_1344" [CR]

9.3. Operation Requirement

Should be always operated

9.4. Image Status Read Command

9.4.1. CR_BRIGHT Command

Command	"CR_BRIGHT" [CR]	
Details	Get Brightness value of user control	
Response	Acceptable	"000_%a" [CR]
	%a	"000" – "063"
	Unacceptable	"?" [CR]

9.4.2. CR_CONT Command

Command	"CR_CONT" [CR]	
Details	Get Contrast value of user control	
Response	Acceptable	"000_%a" [CR]
	%a	"000" – "063"
	Unacceptable	"?" [CR]

9.4.3. CR_COLOR Command

Command	"CR_COLOR" [CR]	
Details	Get Color value of user control	
Response	Acceptable	"000_%a" [CR]
	%a	"000" – "063"
	Unacceptable	"?" [CR]

9.4.4. CR_TINT Command

Command	"CR_TINT" [CR]	
Details	Get Tint value of user control	
Response	Acceptable	"000_%a" [CR]
	%a	"000" – "063"
	Unacceptable	"Error code" [CR] --- Invalid "?" [CR] ---------- When receives unclear command

9.4.5. CR_SHARP Command

Command	"CR_SHARP" [CR]	
Details	Get Sharpness value of user control	
Response	Acceptable	"000_%a" [CR]
	%a	"000" – "015"
	Unacceptable	"?" [CR]

9.4.6. CR_GAMMA Command

Command	"CR_GAMMA" [CR]	
Details	Get Gamma value of user control	
Response	Acceptable	"000_%a" [CR]
	%a	"000" – "015"
	Unacceptable	"?" [CR]

9.4.7. CR_WBAL-R Command

Command	"CR_WBAL-R" [CR]	
Details	Get White Balance Red value of user control	
Response	Acceptable	"000_%a" [CR]
	%a	"000" – "063"
	Unacceptable	"?" [CR]

9.4.8. CR_WBAL-G Command

Command	"CR_WBAL-G" [CR]	
Details	Get White Balance Green value of user control	
Response	Acceptable	"000_%a" [CR]
	%a	"000" – "063"
	Unacceptable	"?" [CR]

9.4.9. CR_WBAL-B Command

Command	"CR_WBAL-B" [CR]	
Details	Get White Balance Blue value of user control	
Response	Acceptable	"000_%a" [CR]
	%a	"000" – "063"
	Unacceptable	"?" [CR]

9.4.10. CR_COLTEMP Command

Command	"CR_COLTEMP" [CR]	
Details	Get Color Temp setting status	
Response	Acceptable	"000_%a" [CR]
	%a	"000" ---------- XLow "001" ---------- Low "002" ---------- Mid "003" ---------- High "ADJ" --------- Processing White Balance adjustment
	Unacceptable	"?" [CR]

9.4.11. CR_PROGV Command

Command	"CR_PROGV" [CR]	
Details	Get Progressive setting status	
Response	Acceptable	"000_%a" [CR]
	%a	"L1" ---------- Progressive mode L1 "L2" ---------- Progressive mode L2 "OFF" -------- Progressive mode Off
		"?" [CR]

9.4.12. CR_FILM Command

Command	"CR_FILM" [CR]	
Details	Get Film mode setting status	
Response	Acceptable	"000_%a" [CR]
	%a	"ON" ---------- Film mode On "OFF" -------- Film mode Off
	Unacceptable	"?" [CR]

9.4.13. CR_IMAGE Command

Command	"CR_IMAGE" [CR]	
Details	Get Image mode setting status. Required data "CUSTOM1" – "CUSTOM4" is the same as "Image1" – "Image4" on OSD Menu.	
Response	Acceptable	"000_%a" [CR]
	%a	"DYNAMIC" ---------- Dinamic "STAND" ---------- Standard "REAL" ---------- Real "CINEMA" ---------- Cinema "BLACKBOARD" ------- Blackboard "CUSTOM1 – 4" ------ Image1 – 4
	Unacceptable	"Error code" [CR] ---- Invalid "?" [CR] ---------- When the projector received unclear command

9.4.14. CR_IMGGMD Command

Command	"CR_IMGGMD" [CR]	
Details	Get Dynamic / Standard / Real / Cinema for Image-Gamma setting.	
Response	Acceptable	"000_%a" [CR]
	%a	"DYN" -------- Dynamic "STD" -------- Standard "REL" --------- Real "CNM" -------- Cinema "BKB" --------- Blackboard
	Unacceptable	"?" [CR]

9.5. PC Status Read Command

9.5.1. CR_FSYNC Command

Command	"CR_FSYNC" [CR]	
Details	Get Fine Sync value	
Response	Acceptable	"000_%a" [CR]
	%a	"0000" – "0031"
	Unacceptable	"Error code" [CR] ---- Invalid "?" [CR] ---------- When the Projector received unclear command

9.5.2. CR_TDOTS Command

Command	"CR_TDOTS" [CR]	
Details	Get Total Dots value	
Response	Acceptable	"000_%a" [CR]
	%a	"nnnn" – "9999" (nnnn = Display Dots + Horizontal Position)
	Unacceptable	"Error code" [CR] ---- Invalid "?" [CR] ---------- When the Projector received unclear command

9.5.3. CR_CLAMP Command

Command	"CR_CLAMP" [CR]	
Details	Get Clamp value	
Response	Acceptable	"000_%a" [CR]
	%a	"0000" – "0127"
	Unacceptable	"Error code" [CR] ---- Invalid "?" [CR] ---------- When the Projector received unclear command

9.5.4. CR_H-POS Command

Command	"CR_H-POS" [CR]	
Details	Get Horizontal Position value	
Response	Acceptable	"000_%a" [CR]
	%a	"0000" – "nnnn" (nnnn = Total Dots – Display Dots)
	Unacceptable	"Error code" [CR] ---- Invalid "?" [CR] ---------- When the Projector received unclear command

9.5.5. CR_V-POS Command

Command	"CR_V-POS" [CR]	
Details	Get Vertical Position value	
Response	Acceptable	"000_%a" [CR]
	%a	"0000" – "nnnn" (nnnn = Total Line – Display Line)
	Unacceptable	"Error code" [CR] ---- Invalid "?" [CR] ---------- When the Projector received unclear command

9.5.6. CR_DDOTS Command

Command	"CR_DDOTS" [CR]	
Details	Get Display Dots value	
Response	Acceptable	"000_%a" [CR]
	%a	"0100" – "nnnn" (nnnn = Total Dots – Horizontal Position)
	Unacceptable	"Error code" [CR] ---- Invalid "?" [CR] ---------- When the Projector received unclear command

9.5.7. CR_DLINE Command

Command	"CR_DLINE" [CR]	
Details	Get Display Line value	
Response	Acceptable	"000_%a" [CR]
	%a	"0100" – "nnnn" (nnnn = Total Line – Vertical Position)
	Unacceptable	"Error code" [CR] ---- Invalid "?" [CR] ---------- When the Projector received unclear command

9.5.8. CR_PCSTORE Command

Command	"CR_PCSTORE" [CR]	
Details	Get the status if Mode1 – Mode5 is Free or Stored for PC Adjust. Each data Mode1 – Mode5 will be shown in 5 bytes. (F: Free, S: Stored)	
Response	Acceptable	"000_%a" [CR]
	%a	"FFFFF" --------- All Freee "SFFFF" --------- Only Mode1 is Stored, and others are Free : "FFFFS" --------- Only Mode5 is Stored, and others are Free "SSSSS" ---------- All Stored
	Unacceptable	"?" [CR]

9.5.9. CR_SETPCADJ Command

Command	"CR_SETPCADJ" [CR]	
Details	Get PC signal for current system.	
Response	Acceptable	"000_%a" [CR]
	%a	"XGA1" "HDTV1080" "MODE1" – "MODE5" … Etc.
	Unacceptable	"?" [CR]

9.6. Video Status Read Command

9.6.1. CR_SERSYS Command

Command	"CR_SERSYS" [CR]	
Details	Get selected.signal. When Auto Mode, it returns by Auto-detect. Only available when Input-Video. (Unavailable when Input is Computer)	
Response	Acceptable	"000_%a" [CR]
	%a	"1080I60" --------- 1080i 60Hz "1080I50" --------- 1080i 50Hz "1035I" ---------- 1035i "720P" ---------- 720p "575P" ---------- 575p "480P" ---------- 480p "575I" ---------- 575i (include composite signal such as PAL) "480I" ---------- 480i (include composite signal such as NTSC) "NO_SIGNAL" -- When no signal
	Unacceptable	"101" [CR] ------- When Input is PC series "?" [CR]

9.7. Input Status Read Command

9.7.1. CR_INPUT Command

Command	"CR_INPUT" [CR]	
Details	Get selected Input No.	
Response	Acceptable	"000_%a" [CR]
	%a	"COMPUTER1" ------ Computer1 Input is selected "COMPUTER2" ------ Computer2 Input is selected "VIDEO" ---------- Video Input is selected
	Unacceptable	"?" [CR]

9.7.2. CR_SOURCE Command

Command	"CR_SOURCE" [CR]	
Details	Get selected Source.	
Response	Acceptable	"000_%a" [CR]
	%a	"DIGITAL" -------- Digital Input is selected "ANALOG" -------- Analog RGB is selected "SCART" ---------- SCART RGB is selected "HDCP" ---------- HDCP is selected "VIDEO" ---------- Video Input is selected "S-VIDEO" --------- S-Video is selected "YPBPR" ---------- YPBPR Input is selected "MCI" ---------- MCI Input is selected "WI" ---------- Wireless Imager is selected "NETWORK" ------ Network is selected
	Unacceptable	"Error code" [CR] ---- Invalid "?" [CR] -------- When the Projector received unclear command

9.7.3. CR_INPUT_%1 Command

Command	"CR_INPUT_%1" [CR]	
%1	"COMPUTER1" -------- Specify Computer1 Input "COMPUTER2" -------- Specify Computer2 Input "VIDEO" ---------- Specify Video Input	
Details	Get specified Input Ssource.	
Response	Acceptable	"000_%a" [CR]
	%a	When %1 is COMPUTER1 "ANALOG" ------- Analog RGB is selected "DIGITAL" --------- Digital is selected "HDCP" ---------- HDCP is selected When %1 is COMPUTER2 "ANALOG" --------- Analog RGB is selected "YPBPR" ---------- Component is selected "SCART" ---------- SCART RGB is selected "OUT" ---------- Monitor Out is selected When %1 is VIDEO "AUTO" ---------- Video Auto is selected "VIDEO" ---------- Video is selected "S-VIDEO" ---------- S-Video is selected
	Unacceptable	"?" [CR]

9.7.4. CR_SYSTEM Command

Command	"CR_SYSTEM" [CR]		
Details	Get selected System		
Response	Acceptable		"000_%a" [CR]
	%a	Input is PC	"101"
		Input is Video	"AUTO" ---------- Auto is selected "NTSC" ---------- NTSC is selected "NTSC443" -------- NTSC4.43 is selected "PAL" ---------- PAL is selected "SECAM" ---------- SECAM is selected "PAL-M" ---------- PAL-M is selected "PAL-N" ---------- PAL-N is selected "1080I" ---------- 1080i is selected "1035I" ---------- 1035i is selected "720P" ---------- 720p is selected "575P" ---------- 575p is selected "480P" ---------- 480p is selected "575I" ---------- 575i is selected "480I" ---------- 480i is selected
	Unacceptable		"101" [CR] -------- When Input is PC "?" [CR] ---------- When received command is unclear

9.8. Screen Status Read Command

9.8.1. CR_SCREEN Command

Command	"CR_SCREEN" [CR]		
Details	Get selected Screen Size		
Response	Acceptable		"000_%a" [CR]
	%a	Input is PC	"NORMAL" -------- Normal (4:3) is selected "WIDE" ---------- Wide (16:9) is selected
		Input is Video	"NORMAL" -------- Normal (4:3) is selected "WIDE" ---------- Wide (16:9) is selected
	Unacceptable		"Error Code" [CR] ------- Invalid "?" [CR] ---------- Command

9.8.2. CR_FLSCREN Command

Command	"CR_FLSCREN" [CR]	
Details	Get the screen size status that Full Screen is selected or not.	
Response	Acceptable	"000_%a" [CR]
	%a	"ON" --------- Full Screen is set "OFF" -------- Full Screen is not set
	Unacceptable	"Error Code" [CR] ------- Invalid "?" [CR] ---------- Command

9.8.3. CR_TRUE Command

Command	"CR_TRUE" [CR]	
Details	Get information if the screen setting is True or not.	
Response	Acceptable	"000_%a" [CR]
	%a	"ON" --------- True mode is set "OFF" -------- True mode is not set
	Unacceptable	"Error Code" [CR] ------- Invalid "?" [CR] ---------- Command

9.8.4. CR_KYSTNMODE Command

Command	"CR_KYSTNMODE" [CR]	
Details	Get Keystone Store Mode setting status.	
Response	Acceptable	"000_%a" [CR]
	%a	"STR" ------ "Store Mode" is Store "RST" ------ "Store Mode" is Reset
	Unacceptable	"?" [CR] ---------- Command

9.9. Lamp Status Read Command

9.9.1. CR_LAMPREPL Command

Command	"CR_LAMPREPL"[CR]	
Details	Get Lamp replacement time information	
Response	Acceptable	"000_%a" [CR]
	%a	"1Y" ------- Over the Lamp replacement time "1N" ------- Have not reached the lamp replacement time
	Unacceptable	"?" [CR]

9.9.2. CR_LAMPMODE Command

Command	"CR_LAMPMODE" [CR]	
Details	Get Lamp mode	
Response	Acceptable	"000_%a" [CR]
	%a	"NORMAL" --------- Lamp mode is Normal "ECO" ---------- Lamp mode is Eco "AUTO" ---------- Lamp mode is Auto
	Unacceptable	"?" [CR]

9.9.3. CR_PROJH Command

Command	"CR_PROJH" [CR]	
Details	Get total Projector running time. (hours)	
Response	Acceptable	"000_%a" [CR]
	%a	"0000000" – "9999999"
	Unacceptable	"?" [CR]

9.10. Sound Status Read Command

9.10.1. CR_VOLUME Command

Command	CR_VOLUME" [CR]	
Details	Get User control Volume value	
Response	Acceptable	"000_%a" [CR]
	%a	"000" – "063"
	Unacceptable	"?" [CR]

9.10.2. CR_MUTE Command

Command	"CR_MUTE" [CR]	
Details	Get Sound Mute setting	
Response	Acceptable	"000_%a" [CR]
	%a	"ON" --------- Sound Mute On "OFF" ------- Sound Mute Off
	Unacceptable	"?" [CR]

9.11. Setting Status Read Command

9.11.1. CR_BBACK Command

Command	"CR_BBACK" [CR]	
Details	Get Blue Back setting	
Response	Acceptable	"000_%a" [CR]
	%a	"ON" --------- Set Blue Back "OFF" ------- Cancel Blue Back
	Unacceptable	"?" [CR]

9.11.2. CR_DISP Command

Command	"CR_DISP" [CR]	
Details	Get Display setting	
Response	Acceptable	"000_%a" [CR]
	%a	"ON" --------- Set Display "OFF" ------- Cancel Display
	Unacceptable	"?" [CR]

9.11.3. CR_LOGO Command

Command	"CR_LOGO" [CR]	
Details	Get Logo setting	
Response	Acceptable	"000_%a" [CR]
	%a	"OFF" ---------- Cancel Logo Function "DEFAULT" ------ Default Logo Function "USER" ---------- User Logo Function
	Unacceptable	"?" [CR]

9.11.4. CR_RCODE Command

Command	"CR_RCODE" [CR]	
Details	Get the selected. Code in Remote Control.	
Response	Acceptable	"000_%a" [CR]
	%a	"001" --------- Code1 is selected "002" --------- Code2 is selected "003" --------- Code3 is selected "004" --------- Code4 is selected "005" --------- Code5 is selected "006" --------- Code6 is selected "007" --------- Code7 is selected "008" --------- Code8 is selected
	Unacceptable	"?" [CR]

9.11.5. CR_LANG Command

Command	"CR_LANG" [CR]	
Details	Get selected Language	
Response	Acceptable	"000_%a" [CR]
	%a	"ENG" --------- English is selected "DEU" --------- German is selected "FRA" --------- French is selected "ITA" ---------- Italian is selected "ESP" --------- Spanish is selected "POR" --------- Portuguese is selected "NED" --------- Dutch is selected "SVE" --------- Swedish is selected "JPN" --------- Japanese is selected "CHI" --------- Chinese is selected "KOR" --------- Korean is selected "RUS" --------- Russian is selected
	Unacceptable	"?" [CR]

9.11.6. CR_ON-STA Command

Command	"CR_ON-STA" [CR]	
Details	Get ON Start setting	
Response	Acceptable	"000_%a" [CR]
	%a	"ON" --------- Set ON Start "OFF" ------- Cancel ON Start
	Unacceptable	"?" [CR]

9.11.7. CR_P-MANE Command

Command	"CR_P-MANE" [CR]	
Details	Get Power Management setting	
Response	Acceptable	"000_%a" [CR]
	%a	"OFF" ---------- Cancel Power Management "READY" ---------- Power Management is Ready mode "SHUTDOWN" ----- Power management is Shut Down mode
	Unacceptable	"?" [CR]

9.11.8. CR_P-MANETIME Command

Command	"CR_P-MANETIME" [CR]	
Details	Get the time to start Power Management	
Response	Acceptable	"000_%a" [CR]
	%a	"001" – "030" ----- 1mininute to 30minutes
	Unacceptable	"?" [CR]

9.11.9. CR_FANSPEED Command

Command	"CR_FANSPEED" [CR]	
Details	Get Fan Control speed	
Response	Acceptable	"000_%a" [CR]
	%a	"MAX" ------- Fan Control speed Max. "NOR" ------- Fan Control speed Normal
	Unacceptable	"?" [CR]

9.11.10. CR_KEYDIS Command

Command	"CR_KEYDIS" [CR]	
Details	Get RC / KEY status	
Response	Acceptable	"000_%a" [CR]
	%a	"NONE" -------- Both RC & KEY are available "RC" ---------- RC is keylocked "KEY" ---------- KEY is keylocked
	Unacceptable	"?" [CR]

9.11.11. CR_TERMINAL Command

Command	"CR_TERMINAL" [CR]	
Details	Get Terminal setting	
Response	Acceptable	"000_%a" [CR]
	%a	"COMPUTER" ------- Computer Input mode "MONITOR" ---------- Monitor Output mode
	Unacceptable	"?" [CR]

9.11.12. CR_STANDBYMODE Command

Command	"CR_STANDBYMODE" [CR]	
Details	Get Standby mode setting	
Response	Acceptable	"000_%a" [CR]
	%a	"ECO" ---------- Eco mode "NORMAL" ------ Normal mode
	Unacceptable	"?" [CR]

9.11.13. CR_POINTER Command

Command	"CR_POINTER" [CR]	
Details	Get Pointer setting	
Response	Acceptable	"000_%a_%b" [CR]
	%a	"SPOTLIGHT" ---------- Spotlight mode "ARROW" ---------- Arrow mode "FINGER" ---------- Finger mode "LASER" ---------- Laser mark mode
	%b	When SPOTLIGHT "MAX" ---------- Large "MID" ---------- Middle "MIN" ---------- Small When ARROW / FINGER / LASER None
	Unacceptable	"?" [CR]

9.11.14. CR_AUTOSETUP Command

Command	"CR_AUTOSETUP_%1" [CR]	
%1	"KEYSTONE" --------- Specify Auto Keystone "PCADJ" ---------- Specify Auto PC Adj.	
Details	Get Auto Setup setting status	
Response	Acceptable	"000_%a" [CR]
	%a	When Keystone "AUTO" ---------- Auto setting "MANUAL" ----- Manual setting "OFF" ---------- Off setting When Auto PC Adj. "ON" ---------- On setting "OFF" --------- Off setting
	Unacceptable	"?" [CR]

9.11.15. CR_FANMODE Command

Command	"CR_FANMODE" [CR]	
Details	Get selected Fan mode.	
Response	Acceptable	"000_%a" [CR]
	%a	"L1" -------- Fan mode L1 "L2" -------- Fan mode L2
	Unacceptable	"?" [CR]

9.12. Other Status Read Command

9.12.1. CR_SIGNAL Command

Command	"CR_SIGNAL" [CR]	
Details	Get information if there is signal or not.	
Response	Acceptable	"000_%a" [CR]
	%a	"ON" ------- There is signal "OFF" ------ No signal
	Unacceptable	"?" [CR]

9.12.2. CR_VMUTE Command

Command	"CR_VMUTE" [CR]	
Details	Get No Show setting status.	
Response	Acceptable	"000_%a" [CR]
	%a	"ON" -------- Set No Show "OFF" ------- Cancel No Show
	Unacceptable	"?" [CR]

9.12.3. CR_FREEZE Command

Command	"CR_FREEZE" [CR]	
Details	Get Freeze setting status.	
Response	Acceptable	"000_%a" [CR]
	%a	"ON" --------- Set Freeze "OFF" -------- Cancel Freeze
	Unacceptable	"?" [CR]

9.12.4. CR_PTIMER Command

Command	"CR_PTIMER" [CR]	
Details	Get Presentation Timer status.	
Response	Acceptable	"000_%a" [CR]
	%a	"ON" ---------- Presentation timer is active "STOP" ------- Presentation timer is pause "OFF" --------- Presentation timer is inactive
	Unacceptable	"?" [CR]

9.12.5. CR_TEMPWARN Command

Command	"CR_TEMPWARN" [CR]	
Details	Get if the sensors are exceeding or approaching critical temperature. When some sensors are installed inside the Projector, get each sensor's temperature.	
Response	Acceptable	"000_%a_%b_%c" [CR]
	%a %b %c	%a: temperature sensor 1 status %b: temperature sensor 2 status %c: temperature sensor 3 status "W" ----- Exceeding critical temperature (Warning) "S" ------ Sensor temperature is safe "N" ------ Not relate to the temperature Ex.) When "S_W_S" [CR] means that sensor 1 is safety temperature, sensor 2 is exceeding critical temperature, and sensor 3 is safety temperature. Note) Depends on Projector models, when the temperature difference between sensor 1 and sensor 2 is over the specified temperature, the sensor may show "W". In this case, sensor 3 shows that the temperature difference is "W", "S", or "N".
	Unacceptable	"?" [CR]

9.12.6. CR_TEMPFAIL Command

Command	"CR_TEMPFAIL" [CR]	
Details	Get the temperature inside a Projector. When some temperature sensors are installed in the Projector, it is possible to know the temperature all at once.	
Response	Acceptable	"000_%a_%b_%c" [CR]
	% a % b % c	%a: Temperature sensor 1 %b: Temperature sensor 2 %c: Temperature sensor 3 (Ex.) "_31.5F" [CR] _ means a space. When the temperature sinks to -, the first character "-" like "-05.5F" [CR]. Last character indicates the sensor's status. Exceeding critical temperature: "F" Sensor temperature is safe: "S" Not relate to the temperature: "N" "_31.5F" indicates 31.5 degrees and safety temperature. When the temperature is safe, the data will be "_00.0S". Every time the Projector is reset, "_00.0S" is set. In short, previous data is deleted.
	Unacceptable	"?" [CR]